2099 Wall bracket

Wall bracket for multi-purpose luminaire 2000

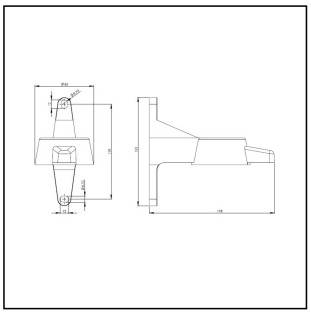

Products may differ in size, colour and appearance to those shown. If you require further information or customisation, please contact us directly.

Type	2099 Wall bracket
WISKA-Order no.	10015550
Packing unit	1
Material	PBT
Colour	Black
Temp. range min	-30 °C
Temp. range max	45 °C
Weight	0,19 kg
Tariff number	94059200

Remarks:

Wall bracket with cable entry
and mounting kit
for multipurpose fixture 2000

17.06.2026

Your Contact:
WISKA India Pvt. Ltd.
Mr. Omkar Ashar · Unit No.247/248,Raheja Tesla Industrial District II , Edison Bldg No.-1A,
Plot No.GEN2/1/C/PART, TTC Industrial Area, MIDC, Juinagar, Navi Mumbai 400705, India
☎ +91-22-4967-1438 · ☎ +91-22-4967-1439 · o.ashar@wiska.in · www.wiska.in

Other technical data on request / subject to change without notice

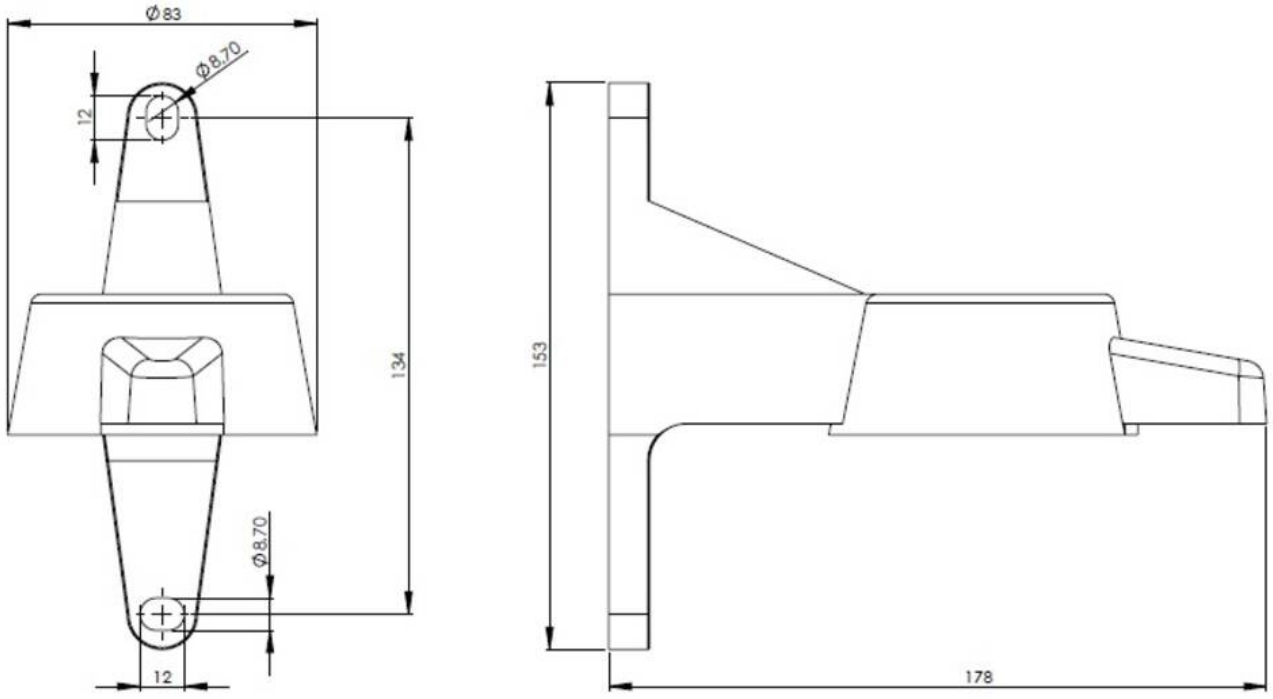

Your Contact:
WISKA India Pvt. Ltd.
Mr. Omkar Ashar · Unit No.247/248,Raheja Tesla Industrial District II , Edison Bldg No.-1A,
Plot No.GEN2/1/C/PART, TTC Industrial Area, MIDC, Juinagar, Navi Mumbai 400705, India
☎ +91-22-4967-1438 · ☎ +91-22-4967-1439 · o.ashar@wiska.in · www.wiska.in

Other technical data on request / subject to change without notice