Product Data Sheet

2010-1x15-24-MB-T-L01

LED multi-purpose luminaire 2010 IP68 plastic 15W 24VDC

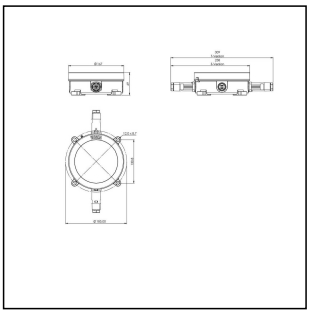

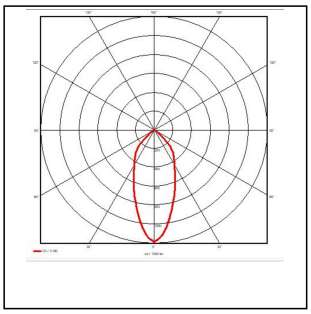

Products may differ in size, colour and appearance to those shown. If you require further information or customisation, please contact us directly.

WISKA-Order no.	10111196
Type	2010-1x15-24-MB-T-L01
Material	PBT
Globe colour	Clear
Wattage	15 W
Voltage	24 V
Protection class	IP66 / IP68 (0,2 bar 30min)
Type of Voltage	DC
Operational areas	Outdoor, Indoor
Temp. range min	-25 °C
Temp. range max	50 °C
Lightsource	LED
Lightsource incl.	Yes
Colour temperature	4000 K
Luminous flux	1600 lm
Colour rendering index	RA>80
Ø cable diameter min	6 mm
Ø cable diameter max	13 mm
Through wiring	3x2,5mm²
Rated Lifetime	L90/B10 @Ta +45 °C
System Lifetime	50000 h
Mounting	Wall, Ceiling, Upside down, Upside, Surface mounting
Using for cable gland	
Colour	Black
Equipment	Through wiring

Your Contact:
WISKA India Pvt. Ltd.
Mr. Omkar Ashar · Unit No.247/248,Raheja Tesla Industrial District II , Edison Bldg No.-1A,
Plot No.GEN2/1/C/PART, TTC Industrial Area, MIDC, Juinagar, Navi Mumbai 400705, India
☎ +91-22-4967-1438 · ☎ +91-22-4967-1439 · o.ashar@wiska.in · www.wiska.in

Other technical data on request / subject to change without notice

External dimensions LxWxH	308x168x69mm
Approval	DNV
Weight	0,9 kg

Remarks:

Bulb: LED included, fixed
Color temperature: 4000K
Beam angle: medium beam 50°
Push-in connector 2x3-pole through-wired
for cable Ø 6-13mm

17.06.2026

Your Contact:
WISKA India Pvt. Ltd.
Mr. Omkar Ashar · Unit No.247/248,Raheja Tesla Industrial District II , Edison Bldg No.-1A,
Plot No.GEN2/1/C/PART, TTC Industrial Area, MIDC, Juinagar, Navi Mumbai 400705, India
☎ +91-22-4967-1438 · ☎ +91-22-4967-1439 · o.ashar@wiska.in · www.wiska.in

Other technical data on request / subject to change without notice

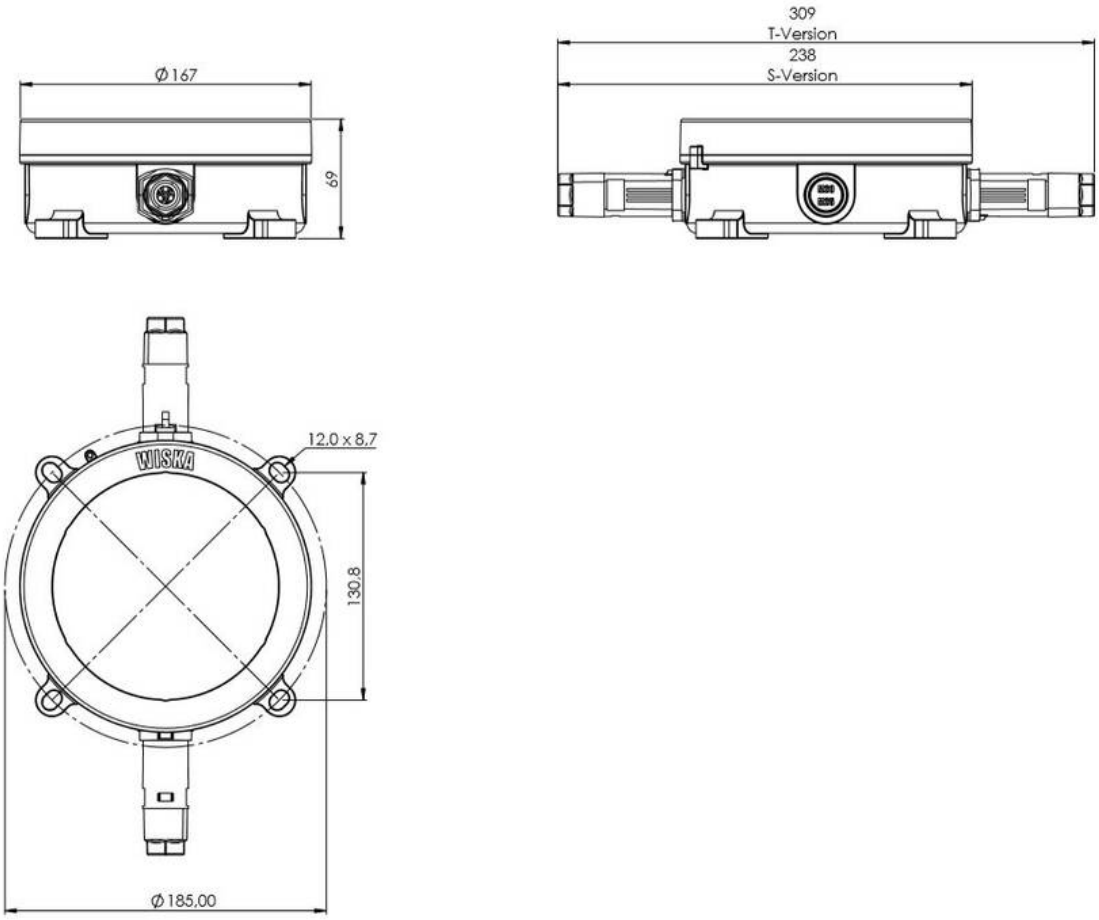

Your Contact:
WISKA India Pvt. Ltd.
Mr. Omkar Ashar · Unit No.247/248,Raheja Tesla Industrial District II , Edison Bldg No.-1A,
Plot No.GEN2/1/C/PART, TTC Industrial Area, MIDC, Juinagar, Navi Mumbai 400705, India
☎ +91-22-4967-1438 · ☎ +91-22-4967-1439 · o.ashar@wiska.in · www.wiska.in

Other technical data on request / subject to change without notice

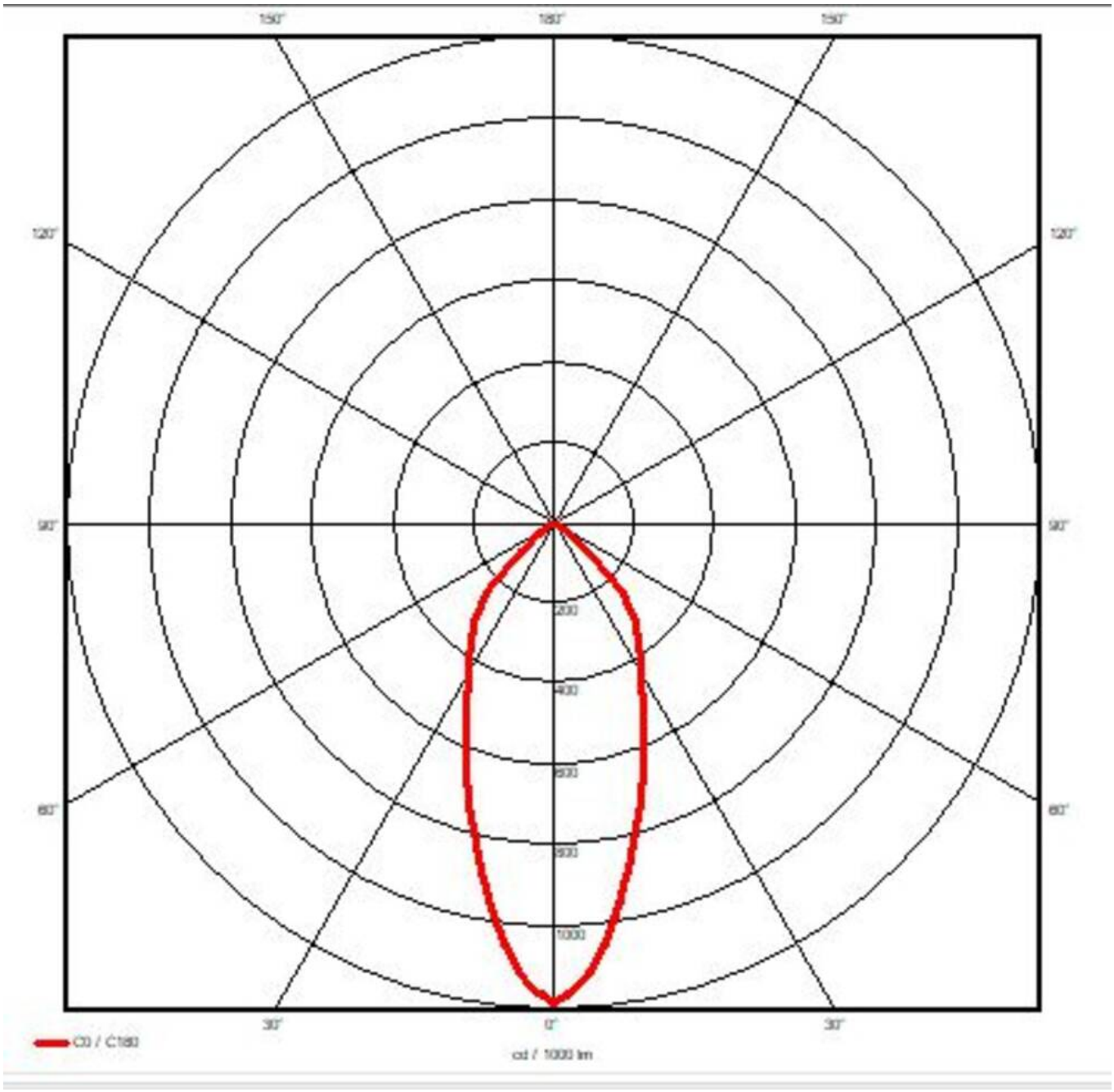

Your Contact:
WISKA India Pvt. Ltd.
Mr. Omkar Ashar · Unit No.247/248,Raheja Tesla Industrial District II , Edison Bldg No.-1A,
Plot No.GEN2/1/C/PART, TTC Industrial Area, MIDC, Juinagar, Navi Mumbai 400705, India
☎ +91-22-4967-1438 · ☎ +91-22-4967-1439 · o.ashar@wiska.in · www.wiska.in

Other technical data on request / subject to change without notice