Product Data Sheet

4010-2x8-230-2-CC-E02

LED multi-purpose luminaire 4010, 2x8W, 230V, 3h, plastic, IP66/67

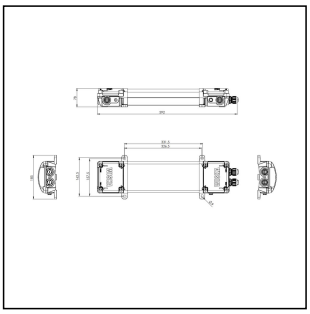

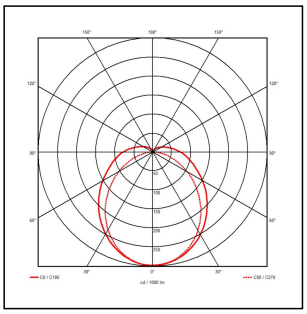

Products may differ in size, colour and appearance to those shown. If you require further information or customisation, please contact us directly.

WISKA-Order no.	10111895
Type	4010-2x8-230-2-CC-E02
Material	Polycarbonate
Material globe/diffuser	Polycarbonate
Globe colour	Opal
Wattage	16 W
Power^	2 x 8 W
Voltage	230 V
Voltage min. (V)	220 V
Voltage max. (V)	240 V
Type of Voltage	AC
Frequence	50/60 Hz
Protection class	IP66 / IP67
Operational areas	Indoor / Outdoor
Temp. range min	-25 °C
Temp. range max	50 °C
Impact resistance	IK10
Battery back up time	3 hour
Lightsource	LED
Lightsource incl.	Yes
Colour temperature	4000 K
Luminous flux	2400 lm
Rated Lifetime	L70/B10 @Ta +45 °C
System Lifetime	100000 h
Material cable gland	Polyamide

Your Contact:
WISKA India Pvt. Ltd.
Mr. Omkar Ashar · Unit No.247/248,Raheja Tesla Industrial District II , Edison Bldg No.-1A,
Plot No.GEN2/1/C/PART, TTC Industrial Area, MIDC, Juinagar, Navi Mumbai 400705, India
☎ +91-22-4967-1438 · ☎ +91-22-4967-1439 · o.ashar@wiska.in · www.wiska.in

Other technical data on request / subject to change without notice

Type of cable gland	M 25 x 1,5
Ø cable diameter min	9 mm
Ø cable diameter max	17 mm
External dimensions LxWxH	592x185x78mm
Weight	1,8 kg
Colour	Black
Mounting	Surface mounting, Wall, Ceiling

Recommended accessories

Adapterprofile MPL 18W - 4010 8W (2 pcs)	22001514

17.06.2026

Your Contact:
WISKA India Pvt. Ltd.
Mr. Omkar Ashar · Unit No.247/248,Raheja Tesla Industrial District II , Edison Bldg No.-1A,
Plot No.GEN2/1/C/PART, TTC Industrial Area, MIDC, Juinagar, Navi Mumbai 400705, India
☎ +91-22-4967-1438 · ☎ +91-22-4967-1439 · o.ashar@wiska.in · www.wiska.in

Other technical data on request / subject to change without notice

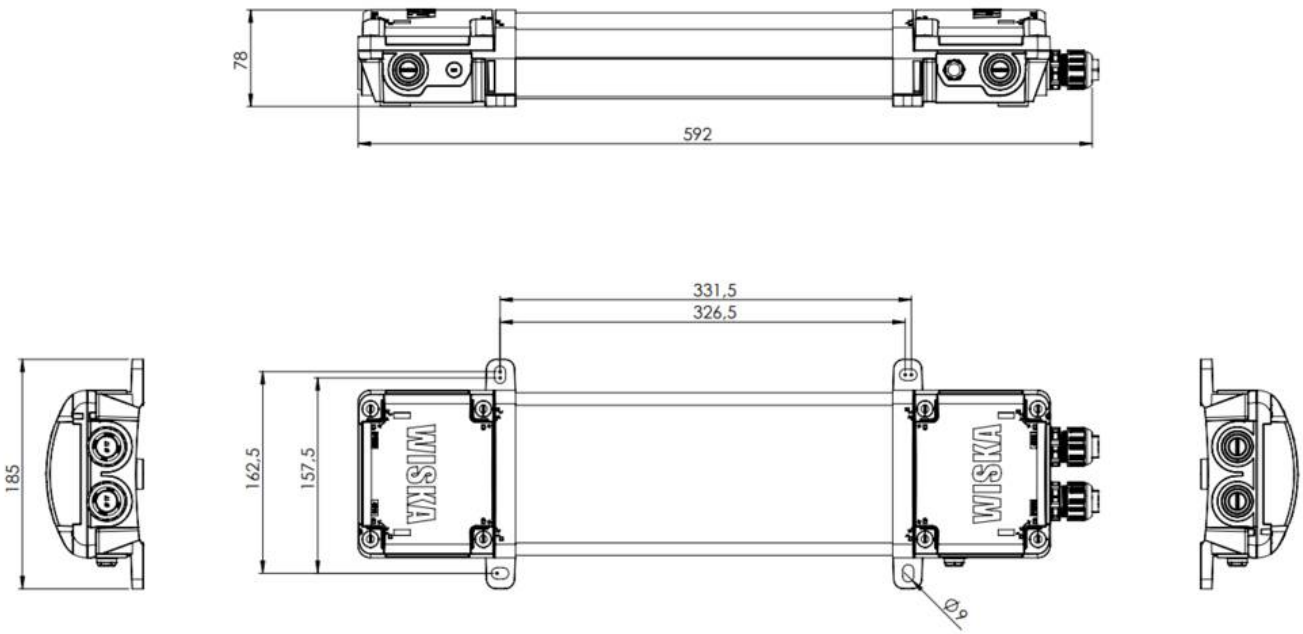

Your Contact:
WISKA India Pvt. Ltd.
Mr. Omkar Ashar · Unit No.247/248,Raheja Tesla Industrial District II , Edison Bldg No.-1A,
Plot No.GEN2/1/C/PART, TTC Industrial Area, MIDC, Juinagar, Navi Mumbai 400705, India
☎ +91-22-4967-1438 · ☎ +91-22-4967-1439 · o.ashar@wiska.in · www.wiska.in

Other technical data on request / subject to change without notice

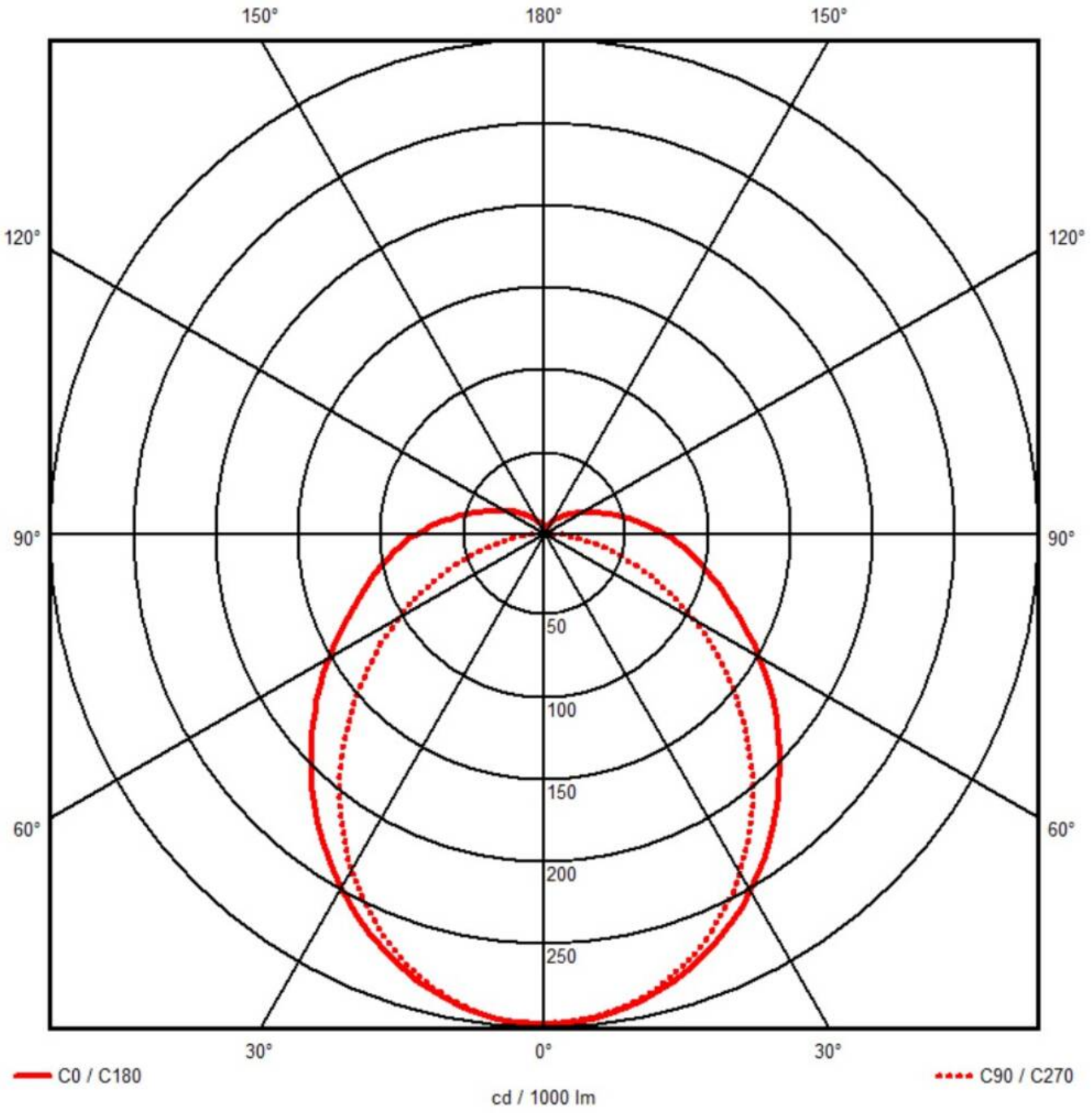

Your Contact:
WISKA India Pvt. Ltd.
Mr. Omkar Ashar · Unit No.247/248,Raheja Tesla Industrial District II , Edison Bldg No.-1A,
Plot No.GEN2/1/C/PART, TTC Industrial Area, MIDC, Juinagar, Navi Mumbai 400705, India
☎ +91-22-4967-1438 · ☎ +91-22-4967-1439 · o.ashar@wiska.in · www.wiska.in

Other technical data on request / subject to change without notice